No.	Revision	Date	Name
△			
△			

RoHS Compliant

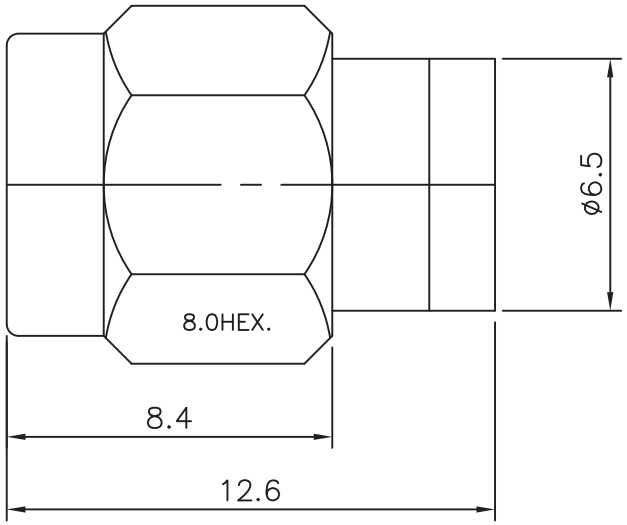

SPECFICATIONS

Frequency Range------ DC~18 GHz
VSWR----------1.15:1Max.(DC~12GHz)
1.20:1Max.(DC~18GHz)
Impedance---------- 50 Ohms
Power Rating---------- 1 Watts
Oper Temp Range------ -45°C~+85°C

SMA-MALE-TERMINATION

Connector parts	Materials	Finish
Body,Coupling cap	Brass	Gold Plated
Center contact	Brass	Gold Plated
Insulator	PTFE	-
Gasket	Silicone Rubber	-

NO.	DESCRIPTION	Q'TY	MATERIAL	FINISH	REMARKS.
PARTS No. 1S-901-18G		NAME SMA-M-TERMINATION			APPROVED
MATERIAL	FINISH	TOLERANCES OTHERWISE SPEC. ±0.05 ANGLES ±1°			CHECKED
		SCALE	UNIT mm		DESIGNED S.J.LEE
CUSTOMER	Cross RF web: www.crossrf.com	DWG NO. 1S-901-18G			DATE. 04/OCT/2007