COMPUTER GENERATED DRAWING
MANUAL CHANGES NOT AUTHORIZED

REVISIONS			
REV.	DESCRIPTION	DATE	RELEASED BY
NC	INITIAL RELEASE	3-26-03	[illegible]

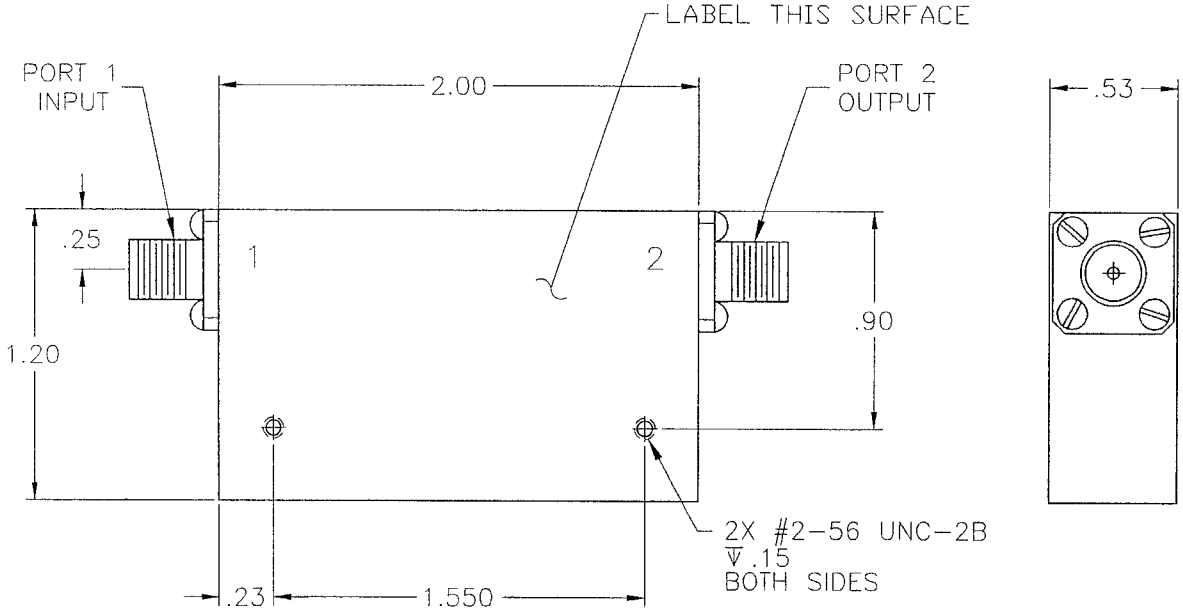

SPECIFICATIONS

FREQUENCY RANGE:	3.5 TO 12.8 MHz
VSWR:	1.50:1 MAX
ISOLATION	17 dB MIN
INSERTION LOSS	2.2 dB MAX
POWER:	2 WATTS CW
TEMPERATURE:	
OPERATING:	−20°C TO +65°C
STORAGE:	−54°C TO +100°C

CONNECTOR ORIENTATION			
DASH NO.	PORT 1	PORT 2	PORT 3 & 4
NONE	SMA FEMALE	SMA FEMALE	TERMINATED
-1	SMA MALE	SMA FEMALE	TERMINATED
-2	SMA FEMALE	SMA MALE	TERMINATED
-3	SMA MALE	SMA MALE	TERMINATED

** NOTE: PART DRAWN IS SMI3513 NO DASH NO. **

ITEM	QTY REQ'D	FSCM NO.	PART OR IDENTIFICATION NO.	NOMENCLATURE OR DESCRIPTION	MATERIAL SPECIFICATION

PARTS LIST

LIST OF MAT'L	USED ON
204-0462-001	SMI3513-3
204-0461-001	SMI3513-1&2
204-0460-001	SMI3513

APPLICATION

UNLESS OTHERWISE SPECIFIED DIMENSIONS ARE IN INCHES
TOLERANCES ARE:
FRACTIONS ± DECIMALS .XX± .02 .XXX± .010 ANGLES ±

MATERIAL:

FINISH:

DO NOT SCALE DRAWING

CONTRACT NO.

APPROVALS	DATE
DRAWN: DS RENFROW	3-24-03
CHECKED:	
DESIGN ENG. [illegible]	3-26-03
MAT. & PROCESSES	
Q.A.	

SIERRA MICROWAVE TECHNOLOGY

TITLE: OUTLINE FOR SMI3513-X

SIZE	FSCM NO.	DWG NO.	REV
B	1CY63	205-3610-001	NC

BRDR SCALE | SHEET OF