REVISIONS				
ZONE	REV	DESCRIPTION	DATE	APPROVED

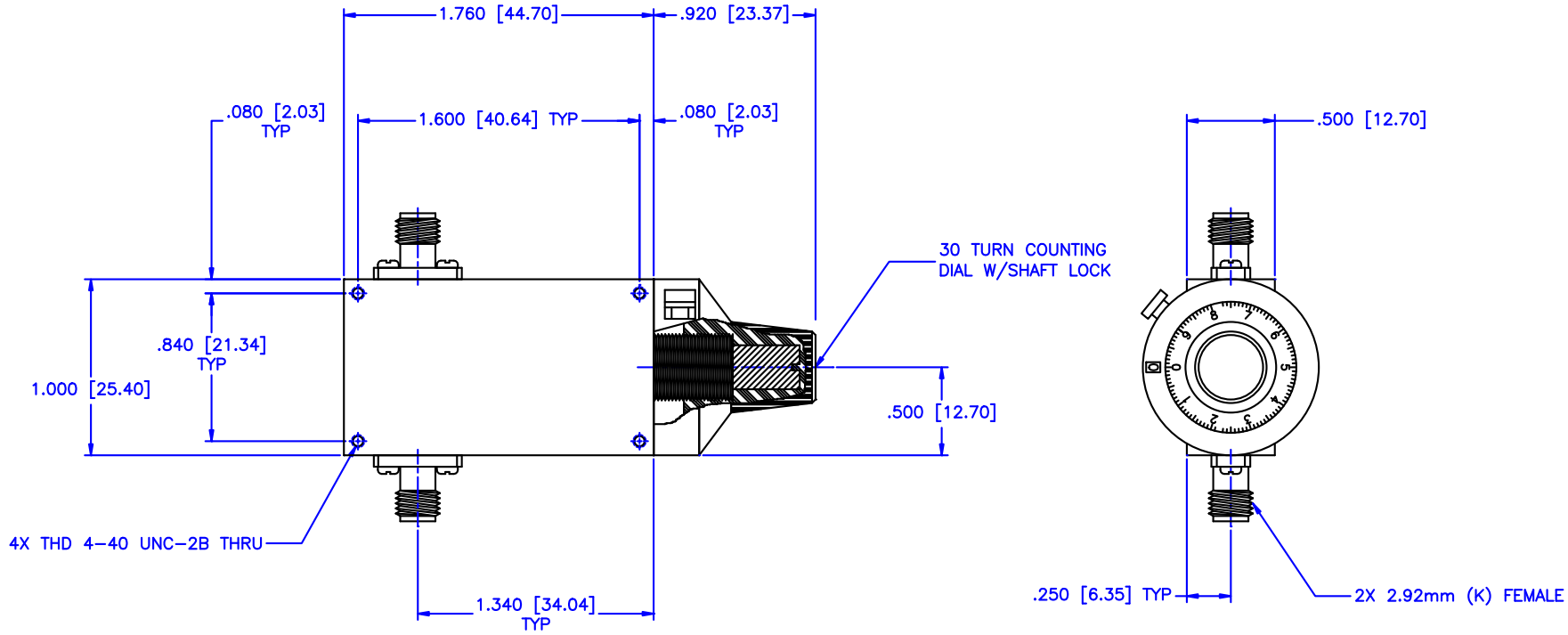

Specifications:

Frequency Range: 18–40 GHz
Attenuation: 10dB
Insertion Loss: 1.5 Max.
VSWR: 2.00:1 Max.
RF Power: 7W Average / 3kW Peak

Environmental

Temperature range: −55°C to +110°C
Shock: 15 G's, 11mS, 1/2 sine
Vibration: 3 G's overall
Altitude: 40,000 ft. Survival 25,000ft Operating

MATERIAL:	MCLI — MICROWAVE COMMUNICATIONS LABORATORIES INC. 7255 30TH AVE. N. SAINT PETERSBURG, FL 33710 TEL: (727) 344-6254 FAX: (727) 381-6116 http://WWW.MCLI.COM	SCALE: N/A	SHEET: N/A
	UNLESS OTHERWISE SPECIFIED: TOLERANCES IN (INCHES) OR [mm] (MILLIMETERS) FRACTIONS: ± 1/64 DECIMALS: ±.015 ANGLE: ±1/2°	DRAWING TITLE: CONTINUOUSLY VARIABLE ATTENUATOR WITH DIAL	
DRAWN: Paiboon Luekhamhan	DATE: 02-08-2011	PART NO. CVA31-10/D	
APPROVED: T. Nguyen	DATE: 02-08-2011	CAGE CODE: 0D2L5	SIZE: A / REV: N/A / DWG NO. 85447
	PROPRIETARY NOTICE: THE INFORMATION IN THIS DRAWING IS PROPRIETARY AND SHALL NOT BE USED OR DISCLOSED WITHOUT WRITTEN PERMISSION FROM MICROWAVE COMMUNICATIONS LABORATORIES INC. (MCLI) THIRD ANGLE PROJECTION		DO NOT SCALE THE DRAWING