DWG NO.		REV.
OL–0110–40–1		B
PART NUMBER	BODY	CONTACT
0110–40–NG	NICKEL	GOLD

PLATING PER SAN-TRON SPEC. 7.3.1-8

1.0 PERFORMANCE:
1.1 FREQUENCY RANGE: DC–3 GHz
1.2 VOLTAGE RATING: 500V RMS (sea level)
1.3 NOMINAL IMPEDANCE: 50 OHMS
1.4 DWV: 1500 V RMS @ 60 Hz (sea level)
1.5 TEMPERATURE RANGE: –65°C TO +165°C
2.0 MATERIALS:
2.1 DIELECTRIC: TEFLON, ASTM–D–1710
2.2 CONTACT: BERYLLIUM COPPER ASTM–B–196
2.3 LOCKWASHER: PHOSPHOR BRONZE, PER ASTM–B–103, #52100
2.4 HERMETIC SEAL: C.R. STEEL, NICKEL STEEL AND CORNING EI10 GLASS
2.5 ALL OTHER METAL PARTS: BRASS PER ASTM–B–16
2.6 GASKET: SILICONE RUBBER, PER ZZ–R–765, CL2,GR50, RED
3.0 FINISHES: SEE TABLE
4.0 MECHANICAL
4.1 INTERFACE IN ACCORDANCE WITH MIL–STD–348
4.2 SEAL: 30 PSI (206.8 kPa) MAXIMUM
4.3 PANEL THICKNESS: .28 MAX

DO NOT SCALE DRAWING

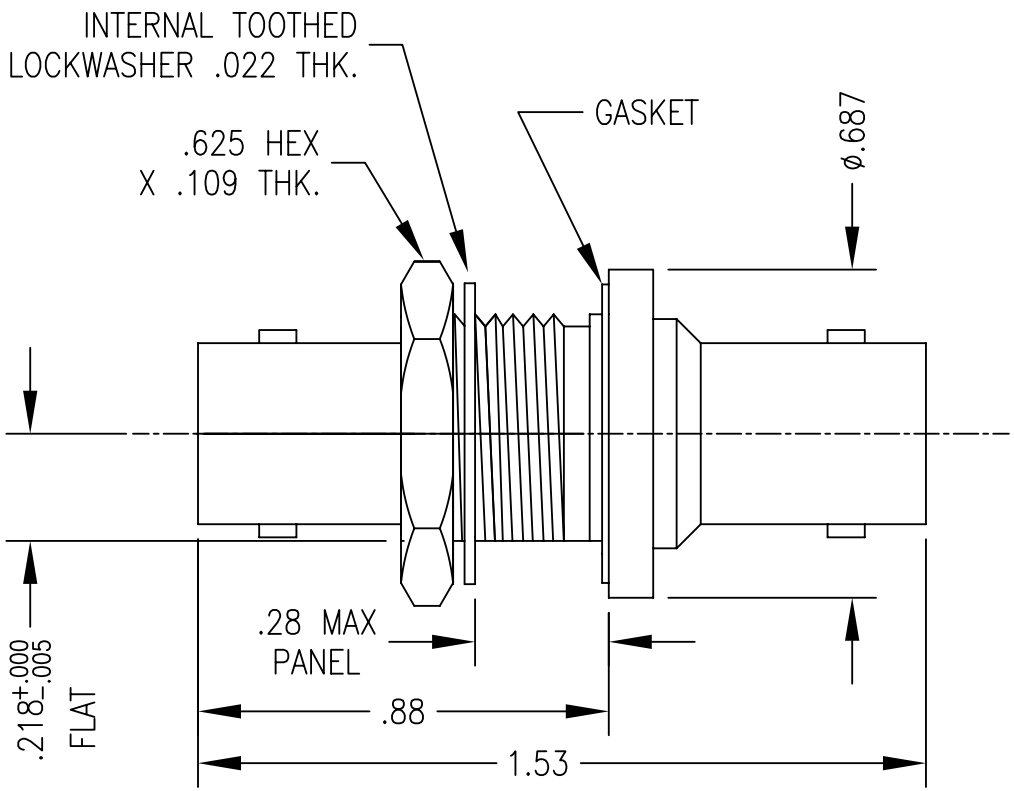

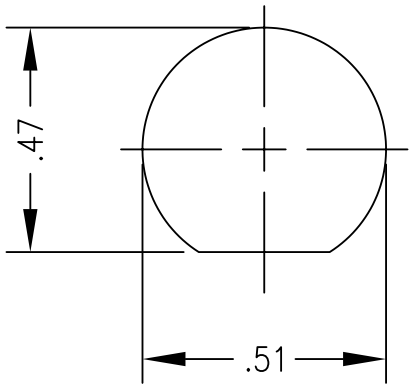

RECOMMENDED MOUNTING HOLE (NOT TO SCALE)

Rev.	Revisions	Disp.	Date	Dwn.	Appd.
B	WAS EXTERNAL TOOTH LOCKWASHER .040 THICK	NEW	8/15/06	FSH	FSH
A	ORIGINAL	NEW	8/9/06		

Ref.: SK–

REMOVE ALL BURRS AND SHARP EDGES .005 MAX.

INTERPRET PER ASME Y14.5M–1994

THIS DRAWING CONTAINS CONFIDENTIAL INFORMATION PROPRIETARY TO SAN–TRON, INC. IT MUST NOT BE REPRODUCED OR DISCLOSED TO OTHERS OR USED IN ANY OTHER WAY, IN WHOLE OR PART EXCEPT AS AUTHORIZED IN WRITING BY SAN–TRON, INC.

UNLESS OTHERWISE SPECIFIED:
ALL DIMENSIONS ARE IN INCHES.
ALL DIMENSIONS ARE AFTER PLATING.
.XXX= ±.005 ALL MACHINED SURFACES 32 MAX.
.XX= ±.01 ANG.±1/2° FRACTIONAL= ±1/64
◎ .004 MAX. TIR. ⊥ AXIS .001

THIRD ANGLE PROJECTION

DWN	DVP	8/9/06
CHKD	SJS	8/15/06
APPR	FSH	8/15/06

SAN-TRON, INC.
4 NEWBURYPORT TPK. IPSWICH MA USA 01938
TEL: 978 - 356 -1585 FAX: 978 - 356 -1573
WWW. santron.com E MAIL: santron@santron.com

TITLE ADAPTER, STRAIGHT, B'HEAD MOUNT BNC(F)–BNC(F) HERMETICALLY SEALED

MATERIAL: SEE NOTE 2.0

FINISH: SEE NOTE 3.0

CAGE CODE: 50896

SCALE X:X

DWG NO. OL–0110–40–1 REV. B