NOTES:

1. ELECTRICAL SPECIFICATIONS:
   LEFT HAND CIRCULAR POLARIZATION
   VSWR = 2:1, BW = 135 MHz
   AXIAL RATIO = 6dB MAX. @ 1615 MHz
2. SPECIFICATIONS ARE FOR UNPACKAGED ANTENNA.
3. FOOTPRINT AND ELECTRICAL SPECIFICATIONS ARE SUBJECT TO CHANGE. CONSULT SPECTRUM CONTROL FOR SPECIFIC APPLICATIONS.
4. TESTING TO BE PERFORMED ON AN ALUMINUM GROUND PLANE, 2.480 [63MM] X 2.480 [63MM] INCHES, IN FREE SPACE.
5. DIMENSIONS IN BRACKETS IN MILLIMETERS.

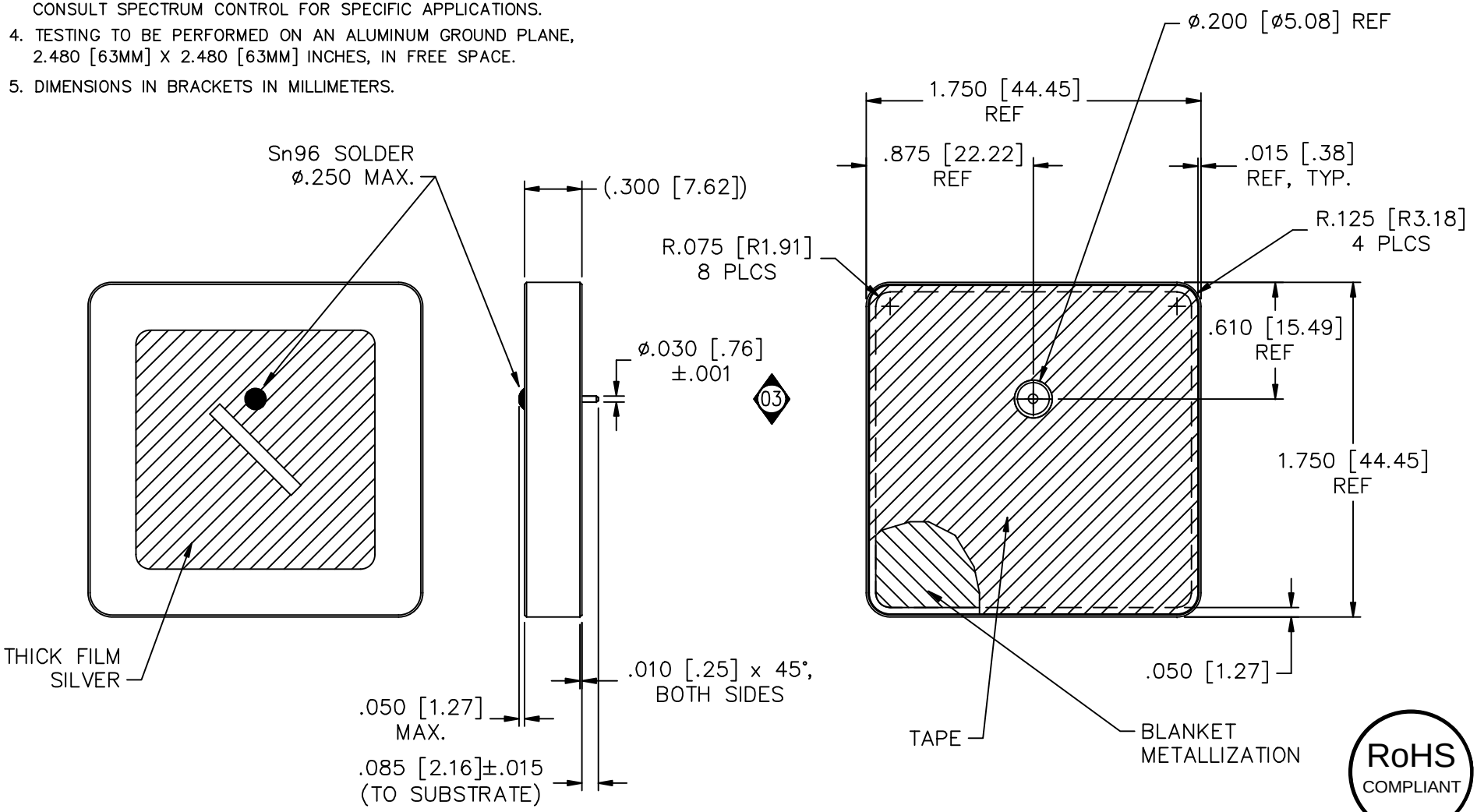

RoHS COMPLIANT

REV. NO.	CHANGE NOTICE	
03	CN 36800-ENG	
02	CN 36611-ENG	
01	CN 34617-CPD	REDRAWN
00	CN 31530-CPD	

UNLESS OTHERWISE SPECIFIED DIMENSIONS ARE IN INCHES (MM) DO NOT SCALE.

THIRD ANGLE PROJECTION

TOLERANCES UNLESS OTHERWISE SPECIFIED
Fractions ± 1/64
Dec .XX±.01(0.3)
Dec .XXX±.005(0.13)
Angles ±0° 30'

CODE IDENT. NO. OLSP2

SPECTRUM CONTROL INC.

FAIRVIEW PENNSYLVANIA

Dwn. KAUFFMAN
Date 8-17-07
Engr. C. KIRETA
Sheet 1 of 1

Description PATCH ANTENNA

PA451615-1575SA

Quality Products From The Specialists In Electro-Magnetic Compatibility