DWG NO.	REV.
OL–0910–75–1	A

PLATING VARIATIONS		
PART NUMBER	BODY	CONTACT
0910–75	NICKEL	GOLD

1.0 PERFORMANCE
1.1 FREQUENCY RANGE: DC–4GHz
1.2 VOLTAGE RATING: 500V RMS (sea level)
1.3 NOMINAL IMPEDANCE: 50 OHMS
1.4 DWV: 1500 V RMS @ 60 Hz (sea level)
1.5 TEMPERATURE RANGE: –65°C TO +165°C
2.0 MATERIALS
2.1 DIELECTRIC: TEFLON, ASTM–D–1710
2.2 CENTER CONTACT: BeCu, ASTM–B–196
2.3 SPRING WASHERS: BERYLLIUM COPPER, ASTM–B–194
2.4 ALL OTHER METAL PARTS: BRASS, ASTM–B–16
2.5 GASKETS: SILICON RUBBER, ZZ–R 765, GR. 50 (RED)
3.0 FINISHES
3.1 CENTER CONTACT: SEE TABLE
3.2 ALL OTHER METAL PARTS: SEE TABLE
4.0 MECHANICAL
4.1 INTERFACE IN ACCORDANCE WITH MIL–STD–348

DO NOT SCALE DRAWING

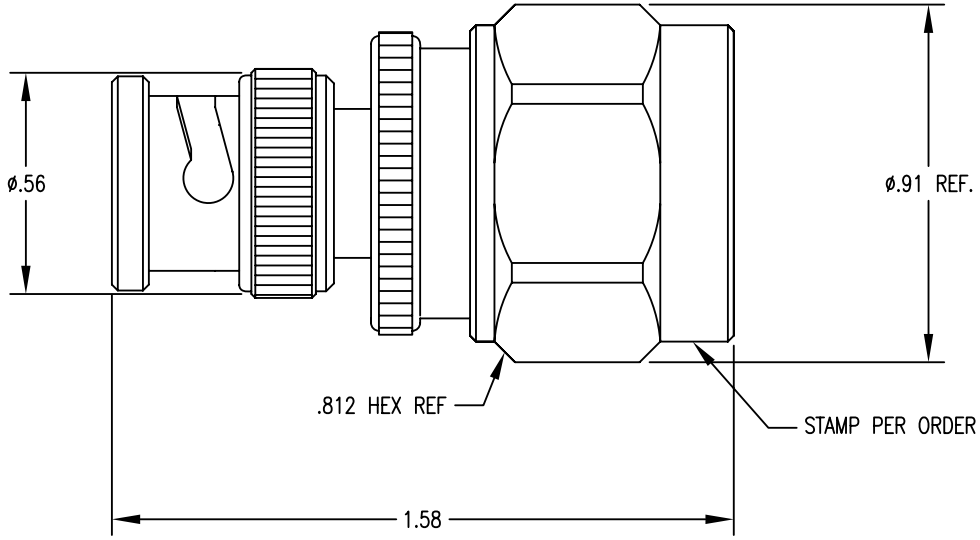

Rev.	Revisions	Disp.	Date	Dwn.	Appd.
A	ORIGINAL	NEW	02/19/04		

Ref.:

REMOVE ALL BURRS AND SHARP EDGES .005 MAX.

INTERPRET PER ASME Y14.5M–1994

THIS DRAWING CONTAINS CONFIDENTIAL INFORMATION PROPRIETARY TO SAN–TRON INC. IT MUST NOT BE REPRODUCED OR DISCLOSED TO OTHERS OR USED IN ANY OTHER WAY, IN WHOLE OR PART EXCEPT AS AUTHORIZED IN WRITING BY SAN–TRON INCORPORATED.

UNLESS OTHERWISE SPECIFIED:
ALL DIMENSIONS ARE IN INCHES.
ALL DIMENSIONS ARE AFTER PLATING.
.XXX= ±.005 ALL MACHINED SURFACES 63 MAX.
.XX= ±.01 ANG.±1/2° FRACTIONAL= ±1/64
◎ .004 MAX. TIR. ⊥ AXIS .001

THIRD ANGLE PROJECTION

DWN	DT	02/19/04
CHKD	SJS	02/19/04
APPR	FSH	02/19/04

SAN-TRON, INC.
4 NEWBURYPORT TPK. IPSWICH MA USA 01938
TEL: 978 - 356 -1585 FAX: 978 - 356 -1573
WWW. santron.com E MAIL: santron@santron.com

TITLE ADAPTER, STRAIGHT, RPBNC SOCKET TO N MALE

MATERIAL: SEE NOTE 2.0

FINISH: SEE NOTE 3.0

CAGE CODE: 50896

SCALE X:X

DWG NO. OL–0910–75–1 REV. A