ZONE	REV	DESCRIPTION	DATE	APPROVED
		REVISIONS		

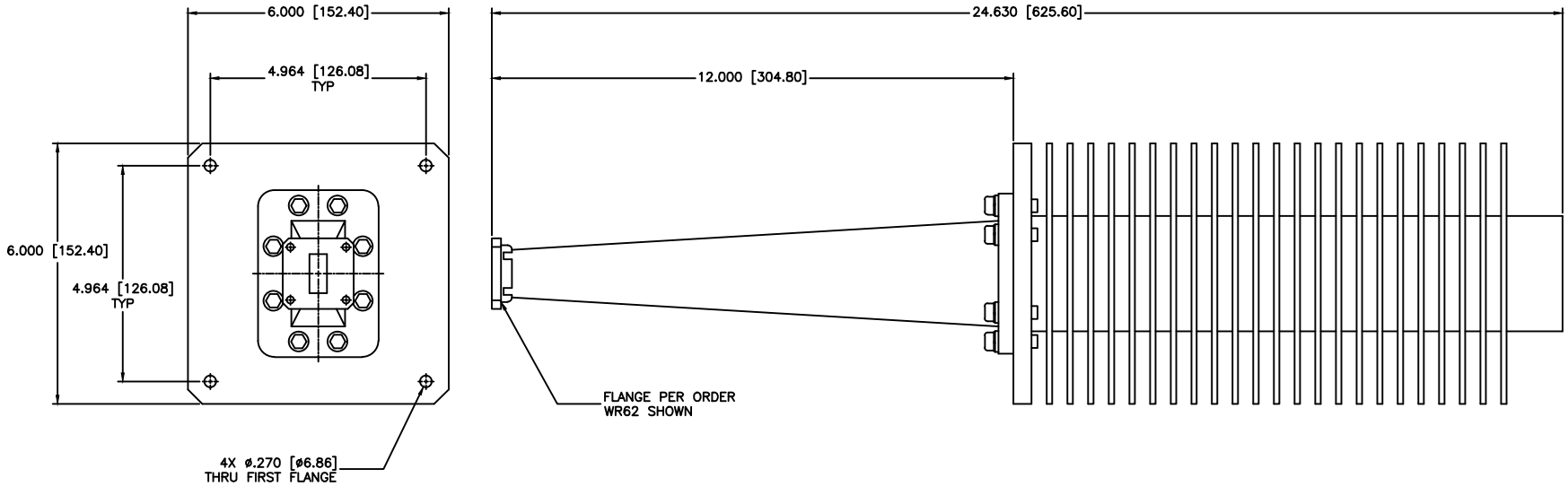

SPECIFICATIONS

Frequency Range: 12.4–18 GHz

Waveguide Size: WR62 (Input)

Flange Types: Per Order (–1,–2,–6,–7,–S)

VSWR: 1.15 Max.

Average Power: 3000 Watts CW

F = FLANGE TYPES

–1 = CPRG
–2 = CPRF
–6 = UG–COVER
–7 = UG–CHOKE
–S = SPECIAL

ORDERING INFORMATION

EXAMPLE PART NUMBER: WL–21–F

VERY HIGH POWER SERIES
FREQUENCY BAND
FLANGE TYPE

MATERIAL: Aluminum 6061 High Temp. Black Paint	MCLI — MICROWAVE COMMUNICATIONS LABORATORIES INC. 7205 30TH AVE. N. SAINT PETERSBURG, FL 33710 TEL: (727) 343-8284 FAX: (727) 387-8116 http://www.mcli.com	SCALE: N/A	WEIGHT: N/A
	UNLESS OTHERWISE SPECIFIED: TOLERANCES IN (INCHES) OR [mm] (MILLIMETERS) FRACTIONS ± 1/64 DECIMALS ±.01 ±.005 ANGLE: ±1/2	DRAWING TITLE: TERMINATION, WR62 3000 Watts	
DRAWN: Pattoon Luekhamhan DATE: 05-03-2011		PART NO.: WL-21-F	
APPROVED: T. Nguyen DATE: 05-03-2011		CAGE CODE: 0D2L5	SIZE: C FSCM: N/A DO NOT SCALE THE DRAWING DWG NO.: 85649