1.0 PERFORMANCE: (sea level)
1.1 FREQUENCY: DC–18 GHz
1.2 NOMINAL IMPEDANCE: 50 OHM
1.3 DWV: 500 Vrms @ 60 Hz
1.4 TEMPERATURE RANGE: –65/+165°C

2.0 MATERIALS:
2.1 DIELECTRIC: PTFE
2.2 CONTACT: BeCu
2.3 OUTER CONTACT: BeCu
2.4 BODY: SS–303, PASSIVATE
3.0 FINISH: SEE TABLE

4.0 MECHANICAL
4.1 INTERFACES PER MIL–STD–348

DWG NO.		REV.
OL–0910–114–1		A
PART NUMBER	BODY	CONTACT
0910–114–PH	PASSIVATE	GOLD

PLATING PER STI 7.3.1–8

DO NOT SCALE DRAWING

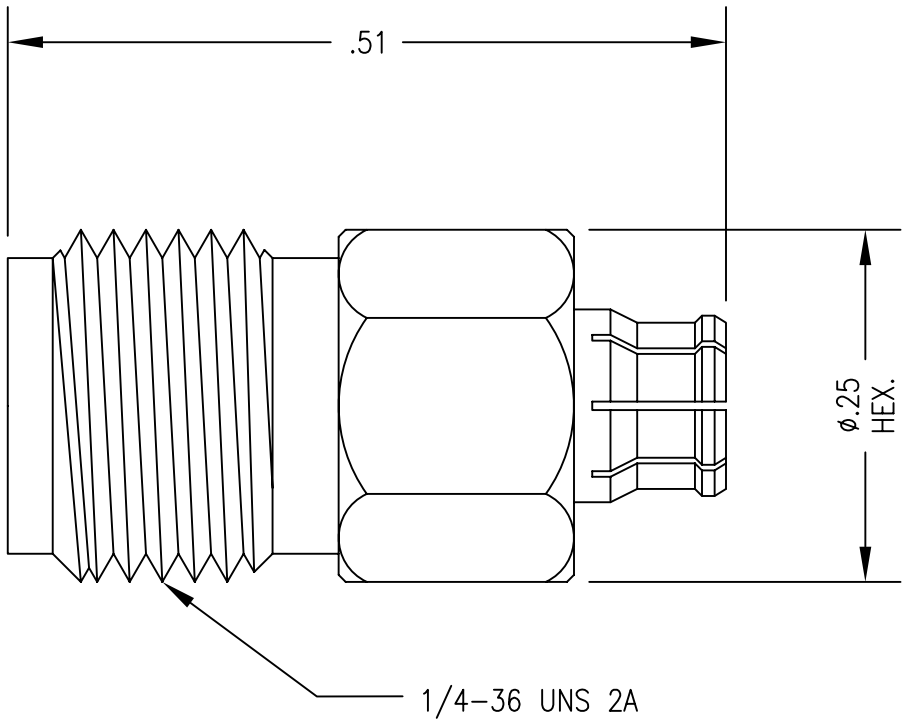

Rev.	Revisions	Disp.	Date	Dwn.	Appd.
A	ORIGINAL	NEW	1/9/11		

Ref.: SK–101223

REMOVE ALL BURRS AND SHARP EDGES .005 MAX.

INTERPRET PER ASME Y14.5M–1994

THIS DRAWING CONTAINS CONFIDENTIAL INFORMATION PROPRIETARY TO SAN–TRON, INC. IT MUST NOT BE REPRODUCED OR DISCLOSED TO OTHERS OR USED IN ANY OTHER WAY, IN WHOLE OR PART EXCEPT AS AUTHORIZED IN WRITING BY SAN–TRON, INC.

UNLESS OTHERWISE SPECIFIED:
ALL DIMENSIONS ARE IN INCHES.
ALL DIMENSIONS ARE AFTER PLATING.
.XXX= ±.005 ALL MACHINED SURFACES 63 MAX.
.XX= ±.01 ANG.±1/2° FRACTIONAL= ±1/64
◎ .004 MAX. TIR. ⊥ AXIS .001

THIRD ANGLE PROJECTION

DWN	RJG	01/11/11
CHKD	SJS	
APPR	FSH	1/10/11

SAN-TRON, INC.
4 NEWBURYPORT TPK. IPSWICH MA USA 01938
TEL: 978 - 356 -1585 FAX: 978 - 356 -1573
WWW. santron.com E MAIL: santron@santron.com

TITLE SMA F TO SMP F ADAPTER

MATERIAL: BeCu / PTFE

FINISH: SEE TABLE

CAGE CODE: 50896

SCALE X:X

DWG NO. OL–0910–114–1 REV. A