ZONE	REV	REVISIONS DESCRIPTION	ECO#	DATE	APPROVED
	A	RELEASED		4/1/04	J. HARRISON
	B	SEE ECO 1699		1/10/08	M. C.
	C	ADDED NOTES PER PIN LOCATIONS	3264	6/29/12	J. H.

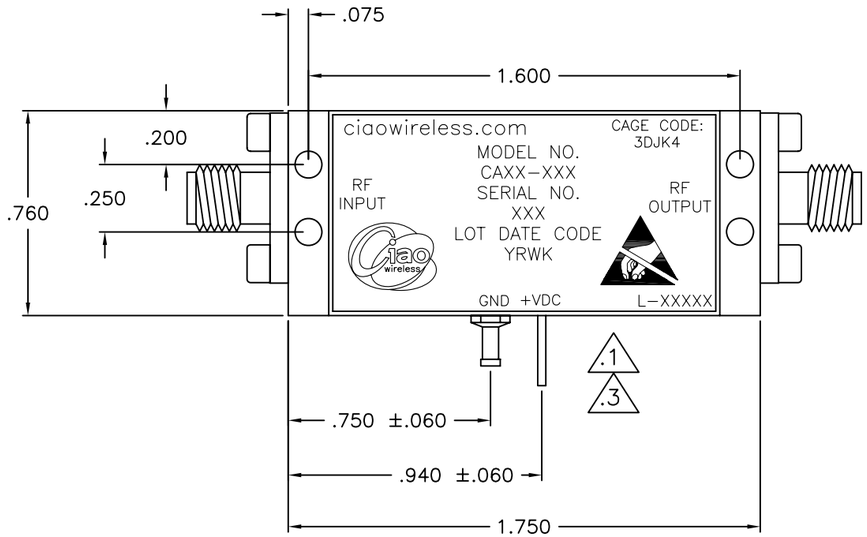

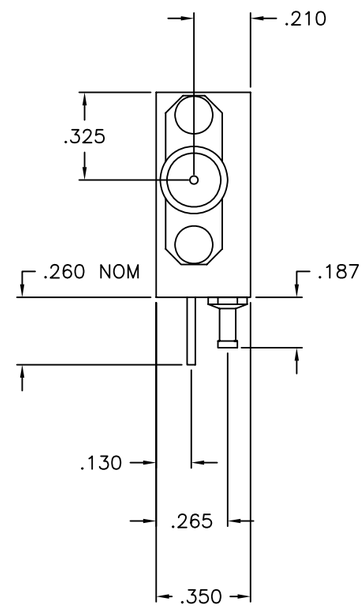

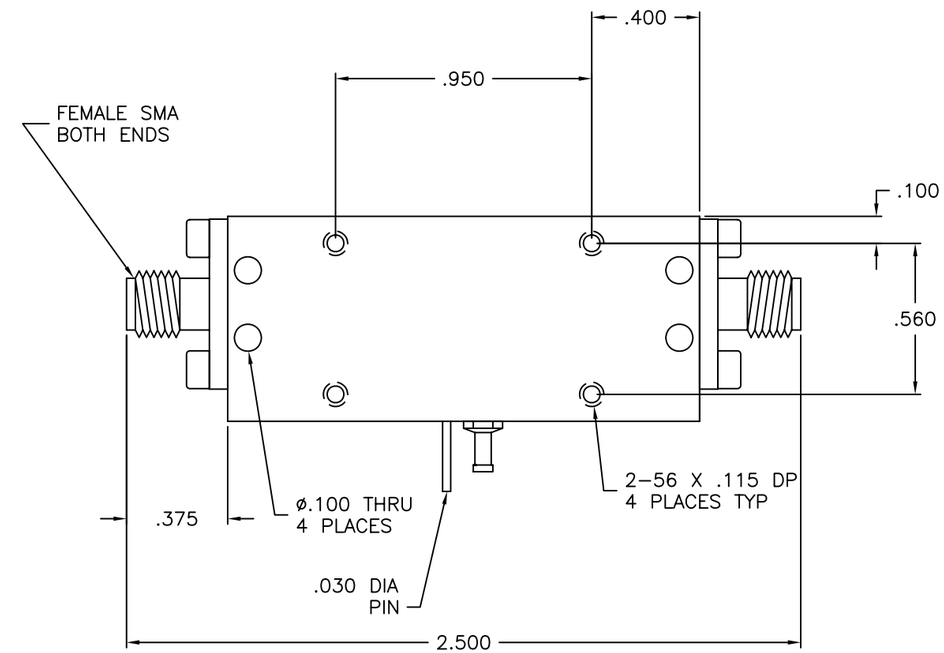

NOTES:

1. GROUND LUG LOCATION SLIGHTLY RELOCATED ON REV C DUE TO PRODUCT ENHANCEMENT. IF PREVIOUS GROUND LUG LOCATION IS REQUIRED, CONTACT THE FACTORY IMMEDIATELY AS CIAO CAN ACCOMMODATE YOUR REQUEST.

2. OUTLINE IS AVAILABLE IN "STEP", "IGES", OR "DWG" FORMATS UPON REQUEST.

3. GROUND AND VDC PINS ARE LOCATED APPROXIMATLEY WHERE SHOWN AND ARE SUBJECT TO CHANGE WITHOUT NOTICE DUE TO PRODUCT ENHANCEMENT. WHEREVER POSSIBLE CIAO WILL PROVIDE NOTICE OF CHANGES TO CUSTOMER

ITEM NO.	QTY REQD	PART OR IDENTIFYING NO.	NOMENCLATURE OR DESCRIPTION	MATERIAL SPECIFICATION

PARTS LIST

NEXT ASSY	USED ON
APPLICATION	

UNLESS OTHERWISE SPECIFIED: DIMENSIONS ARE IN INCHES. TOLERANCES ARE:
FRACTIONS ± 1/64 DECIMALS .XX ±.03 .XXX ±.010 HOLES .XX ±.03 .XXX ±.010 ANGLES ± 0°30'
MACHINED FINISH: 32 RMS
REMOVE BURRS .005 MAX

MATERIAL: ALUMINUM 6061–T6

FINISH: ELECTROLESS NICKEL PER MIL–C–26074 CLASS 4 GRADE B .0005 ± .0001 MAX

DO NOT SCALE DRAWING

CONTRACT NO.

APPROVALS	DATE
DRAWN J. LACBAIN	3/15/04
CHECKED W. QUINONES	4/1/04
MECHANICAL ENGR	
ELECTRICAL ENGR	
PRODUCT ASSURANCE G. TUFTS	4/1/04
PLANNING J. HARRISON	4/1/04
MANUFACTURING G. WASYLEWSKI	4/1/04

CIAO WIRELESS
4000 VIA PESCADOR
CAMARILLO CA, 93012

K4 ICD AMPLIFIER

SIZE	CAGE CODE	DWG. NO.	REV.
B	3DJK4	30017	C

SCALE 1/1 SHEET 1 OF 1

DWG NO. 30017 REV C