1.0 PERFORMANCE:
1.1 FREQUENCY RANGE DC–18 GHz
1.2 VSWR < 1.15
1.3 SYSTEM IMPEDANCE 50 OHMS
1.4 DWV: 1000 Vrms @ 60 Hz (SEA LEVEL)
1.5 VOLTAGE RATING: 335 Vrms (SEA LEVEL)
1.6 TEMP RANGE: –65 / +165 °C

2.0 MATERIALS
2.1 CONTACT: BERYLLIUM COPPER
2.2 OTHER METAL PARTS: BRASS
2.3 INSULATOR: TEFLON

3.0 FINISHES
3.1 CONTACT: SEE TABLE
3.2 BODY: SEE TABLE

4.0 MECHANICAL
4.1 INTERFACES PER MIL–STD–348
4.2 INSULATOR RETENTION: 6 LBS MIN.
4.3 DURABILITY: 100 CYCLES

DWG NO. 0L–1210–07–1 REV. A

PLATING VARIATIONS

PART NUMBER	BODY	CONTACT
1210–07–NH	NICKEL	GOLD/Ni
1210–07–FH	Au FUSION	GOLD/Ni

PLATING PER SAN–TRON SPEC. 7.3.1–8

DO NOT SCALE DRAWING

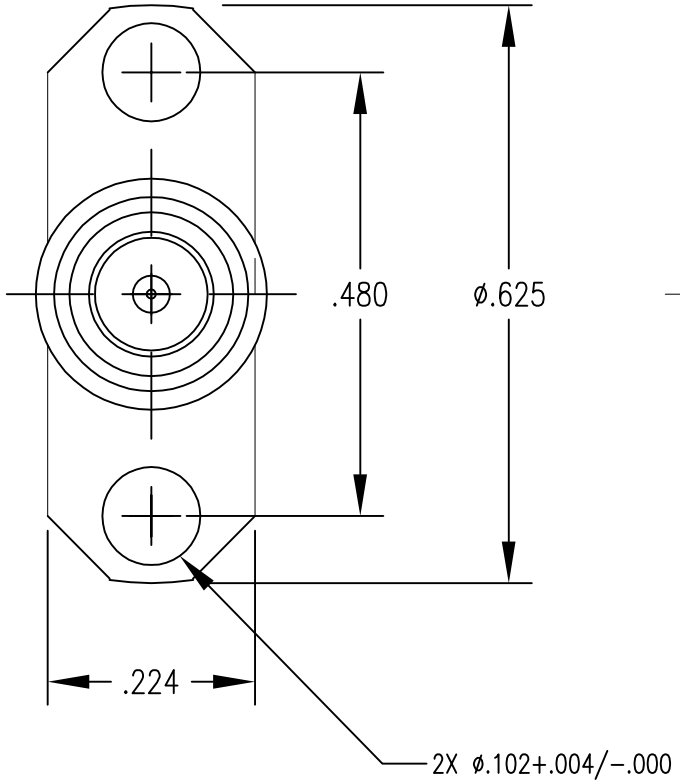

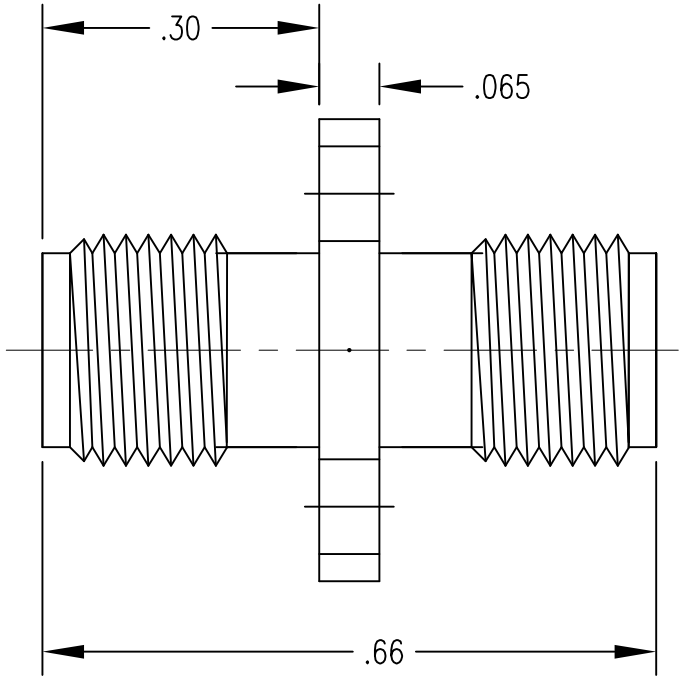

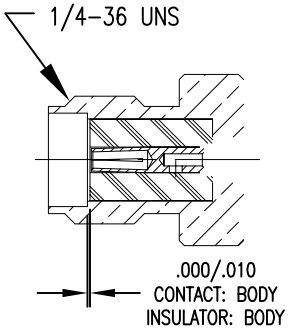

Rev.	Revisions	Disp.	Date	Dwn.	Appd.
A	ORIGINAL	NEW	11/1/04		

Ref.:

REMOVE ALL BURRS AND SHARP EDGES .005 MAX.

INTERPRET PER ASME Y14.5M–1994

THIS DRAWING CONTAINS CONFIDENTIAL INFORMATION PROPRIETARY TO SAN–TRON INC. IT MUST NOT BE REPRODUCED OR DISCLOSED TO OTHERS OR USED IN ANY OTHER WAY, IN WHOLE OR PART EXCEPT AS AUTHORIZED IN WRITING BY SAN–TRON INCORPORATED.

UNLESS OTHERWISE SPECIFIED:
ALL DIMENSIONS ARE IN INCHES.
ALL DIMENSIONS ARE AFTER PLATING.
.XXX= ±.005 ALL MACHINED SURFACES 63 MAX.
.XX= ±.01 ANG.±1/2° FRACTIONAL= ±1/64
◎ .004 MAX. TIR. ⊥ AXIS .001

THIRD ANGLE PROJECTION

DWN	LAP	11/1/04
CHKD	SJS	11/2/04
APPR	FSH	11/1/04

SAN-TRON, INC.
4 NEWBURYPORT TPK. IPSWICH MA USA 01938
TEL: 978 - 356 -1585 FAX: 978 - 356 -1573
WWW. santron.com E MAIL: santron@santron.com

TITLE ADAPTER, STRAIGHT, 2 HOLE PANEL MOUNT SMA (F) TO SMA (F)

MATERIAL: SEE NOTES
FINISH: SEE NOTES
CAGE CODE: 50896
DWG NO. 0L–1210–07–1
REV. A
SCALE X:X