REVISIONS			
REV.	DESCRIPTION	DATE	APPROVED
NC	INITIAL RELEASE		

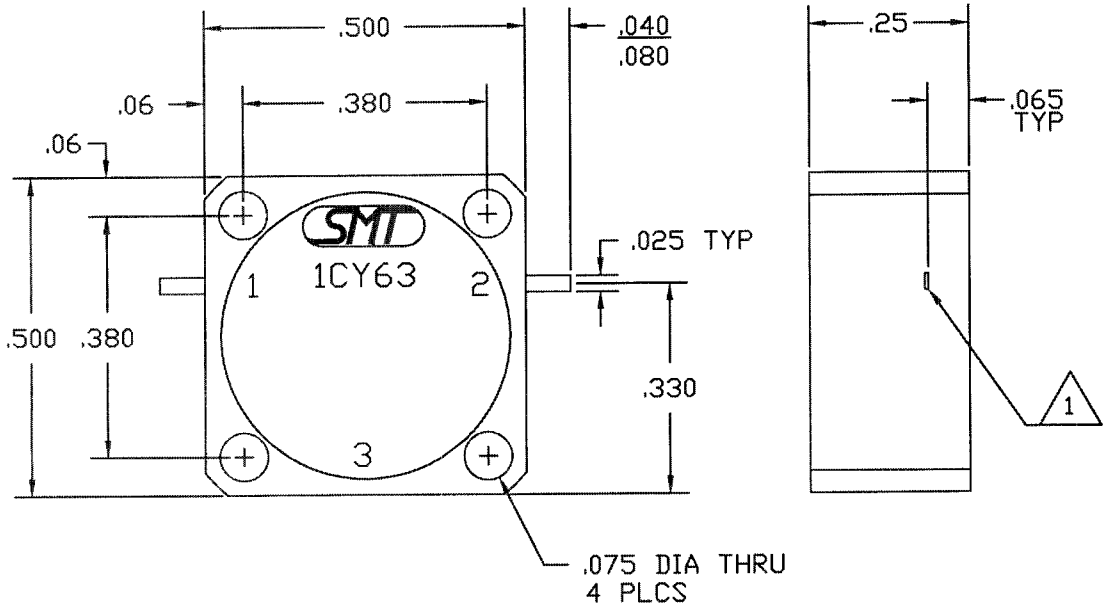

SPECIFICATIONS

1. FREQUENCY RANGE: 3.4 TO 3.6 GHz
2. VSWR: 1.25:1 MAX
3. ISOLATION: 20 dB MIN
4. INSERTION LOSS: 0.4 dB MAX
5. TEMPERATURE:
   - OPERATING: -20° TO +65°C
   - STORAGE: -54° TO +100°C

2. CASE: STAINLESS STEEL NICKEL PLATED.

1. TABS ARE .005±.001 THK. Be Cu, GOLD PLATED.

NOTES:

QTY REQD	FSCM NO.	PART OR IDENTIFING NO.	NOMENCLATURE OR DESCRIPTION	MATERIAL SPECIFICATION

PARTS LIST

203-0113-001	SDI3436A
NEXT ASSY	USED ON
APPLICATION	

FRACTIONS ± DECIMALS .XX± .01 .XXX± .005 ANGLES ±

MATERIAL

FINISH

APPROVALS	DATE
DRAWN	
CHECKED	
ISSUED	

SMT SIERRA MICROWAVE TECHNOLOGY

OUTLINE FOR SDI3436A

SIZE	FSCM NO.	DWG. NO.	REV.
B	1CY63	205-1933-001	

SCALE | SHEET