WAVEGUIDE TO COAXIAL ADAPTER --- RFWA650

1.0	Mechanical Specifications	
1.1	Waveguide type	Rectangular Waveguide WR650
1.2	Flange type	CPRG, CPRF, COVER, CHOKE available
1.3	Flange Holes	Through
1.4	Basis-material	Aluminum, Brass, Alloyed Cuprum, Stainless
1.5	Coaxial Connector	SMA, N, TNC, 7/16 (Male or Female)
1.6	Internal Body Finish	Silver Plated chromate or conversion
1.7	External Body Finish	Body painted with gray/black epoxy enamel

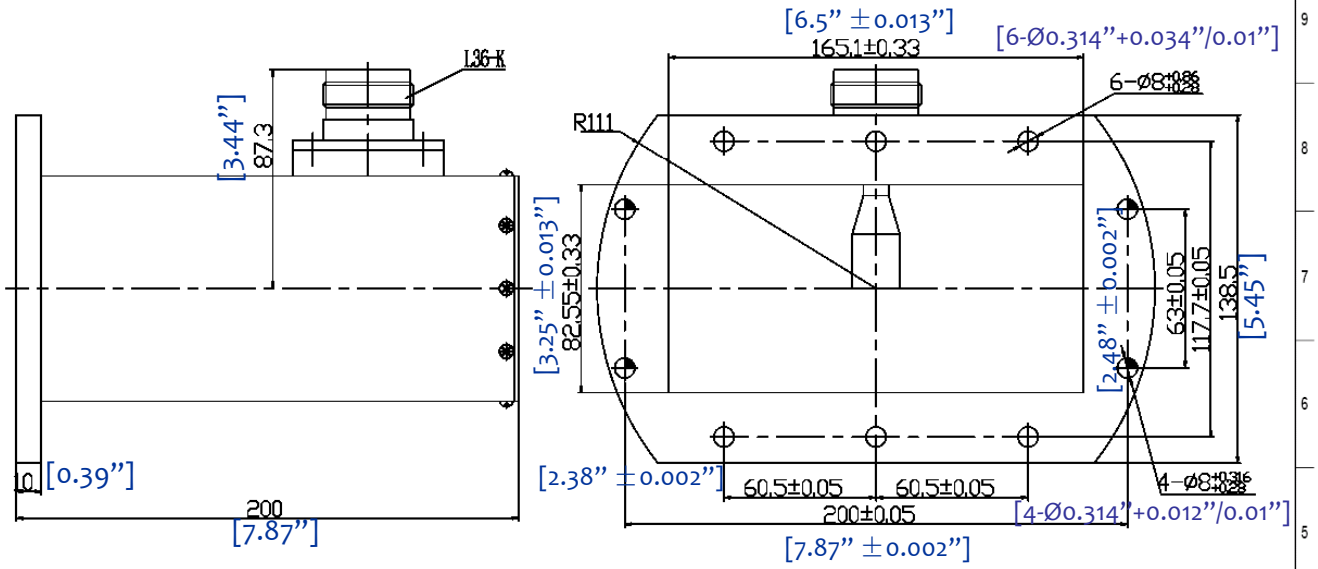

2.0	Environment specifications	
2.1	Operation Temp.	-40°C~+85°C
2.2	Storage Temp.	-50°C~+125°C
2.3	Altitude	45000 ft
2.4	Vibration	10g rms (15 degree 2KHz)
2.5	Humidity	100% RH at 35c, 95%RH at 40 deg c
2.6	Shock	20G for 11msc

3.0	Electrical Specifications	
3.1	Frequency Range	1.12 – 1.70GHz
3.2	Max. VSWR	1.20:1

Part Number: RF W A 650 A o CF AL

- RF-Lambda
- Waveguide
- Adapter
- Waveguide Type Number
- **Connector Type:** **A**=SMA, **B**=N, **C**=TNC, **D**=7/16
- **Degree:** **9**=90° or **o**=0°
- **Flange Type:** **CG**=CPRG; **CF**=CPRF; **CO**=COVER; **CK**=CHOKE
- **Material:** **AL**=Aluminum; **BS**=Brass; **AC**=Alloyed Cuprum; **SS**=Stainless

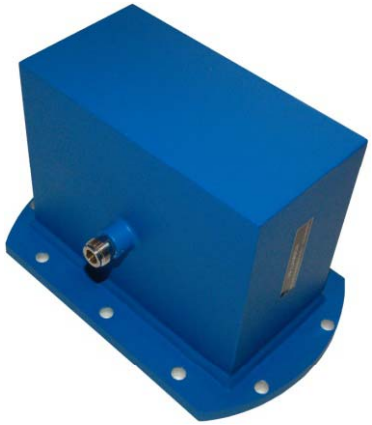

PAGE 1 OF 1	DATE Dec 19th 2003
PROPRIETARY INFORMATION THE INFORMATION CONTAINED IN THIS DOCUMENT IS THE PROPERTY OF RF-LAMBDA EXCEPT AS SPECIFICALLY AUTHORIZED IN WRUTUBG BT RF-LAMBDA. THE HOLDER OF THIS DOUCUMENT SHALL KEEP ALL INFORMATION CONTAINED HEREIN CONFIDENTIAL AND SHALL PROTECT SAME IN THE WHOLE OR IN PART FROM DISCLOSURE AND DISSEMINATION OF ALL THIRD PARTIES AND SHALL USE SAME FOR OPERATING AND MAINTENANCE PURPOSES ONLY	DESIGN RFPC
	RF-LAMBDA RFPC
RFWA650 WAVEGUIDE TO COAXIAL ADAPTER	CAD MODEL REVISION 01
	ASSEMBLY REVISION VS12
	ASSEMBLY NAME RFLVR45
www.rflambda.com	DRAWING NUMBER D05-4
RF-LAMBDA	SIZE LT / SHEETS 1 OF 1